PRODUCT INFORMATION PACKET

Model No: C4D17FK10H
Catalog No: 108092.00
..1 1/2HP..1750RPM.S56C.TEFC.180V...CONT.40C.1.0SF.RIGID C.C4D17FK10.....DC NEMA.....
SCR

Regal and Leeson are trademarks of Regal Beloit Corporation or one of its affiliated companies.
©2018 Regal Beloit Corporation, All Rights Reserved. MC017097E

Nameplate Specifications

Output HP	**1.50 Hp**	Output KW	**1.1 kW**
Voltage	**180 V**	Current	**7.6 A**
Speed	**1750 rpm**	Service Factor	**1**
Efficiency	**86.5 %**	Duty	**Continuous**
Insulation Class	**H**	Frame	**S56C**
Enclosure	**Totally Enclosed Fan Cooled**	Overload Protector	**No**
Ambient Temperature	**40 °C**	Drive End Bearing Size	**6203**
Opp Drive End Bearing Size	**6203**	UL	**Recognized**
CSA	**Y**	CE	**N**

Technical Specifications

Rotation	**Reversible**	Mounting	**Rigid C base**
Overall Length	**16.82 in**	Frame Length	**9.47 in**
Shaft Diameter	**0.625 in**	Shaft Extension	**2.06 in**
Outline Drawing	**031879-108092**		

This is an uncontrolled document once printed or downloaded and is subject to change without notice. Date Created: 10/15/2018

RBC PROPRIETARY AND CONFIDENTIAL INFORMATION
This document is the property of REGAL BELOIT CORPORATION ("RBC") including its subsidiaries and divisions and contains proprietary information of RBC. This document is loaned on the express condition that neither it nor the information contained therein shall be disclosed to others without the express written consent of RBC, and that the information shall be used by the recipient only as approved expressly by RBC. This document shall be returned to RBC upon its request. This document may be subject to certain restrictions under U.S. export control laws and regulations.

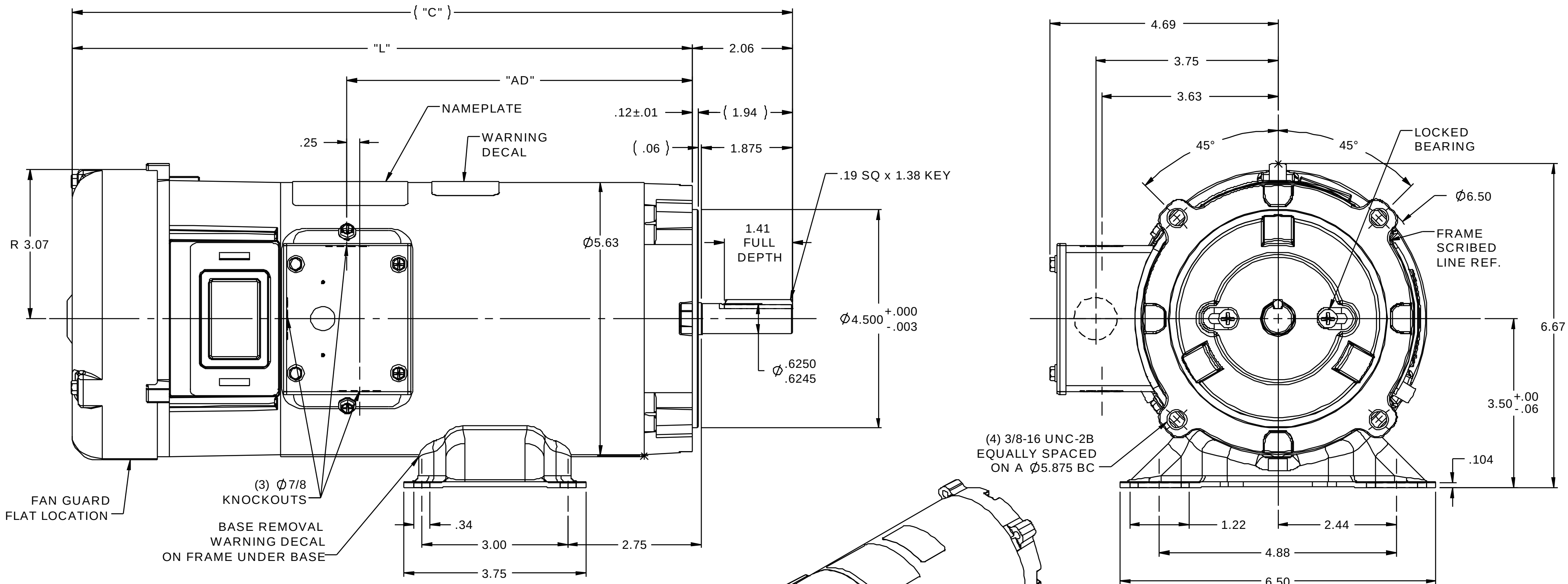

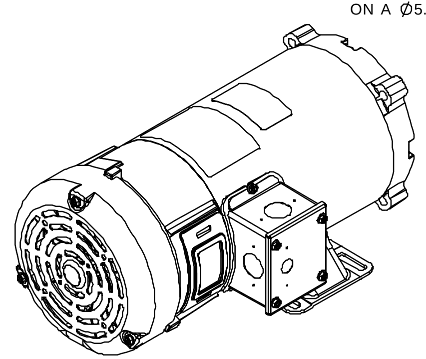

CATALOG No.	"C"	"L"	"AD"	VOLTS	H.P.	RPM
109100.00	15.82	13.76	8.10	90	3/4	1140
109099.00	14.32	12.26	6.60	90	1/2	1140
109098.00	12.82	10.76	5.10	90	1/3	1140
108265.00	15.32	13.26	7.60	180	1 1/2	2500
108092.00	16.82	14.76	9.10	180	1 1/2	1750
108023.00	14.82	12.76	7.10	180	1	1750
108022.00	14.82	12.76	7.10	90	1	1750
108021.00	13.82	11.76	6.10	180	1	2500
108020.00	13.32	11.26	5.60	90	1	2500
108019.00	13.82	11.76	6.10	180	3/4	1750
108018.00	13.82	11.76	6.10	90	3/4	1750
108017.00	12.82	10.76	5.10	180	3/4	2500
108016.00	12.82	10.76	5.10	90	3/4	2500
108015.00	12.82	10.76	5.10	180	1/2	1750
108014.00	12.82	10.76	5.10	90	1/2	1750

NOTES:
1) MAXIMUM FACE RUNOUT .004 T.I.R.
2) MAXIMUM PILOT ECCENTRICITY .004 T.I.R.
3) PERMISSIBLE SHAFT RUNOUT .002 T.I.R.
4) GASKETS THROUGHOUT

NO	REVISION	BY & DATE	
06	CHANGED .06 & 1.94 DIMS TO REF., ISAAC 12-0984	IPG	1/30/2013
05	ADDED NOTE ABOUT FAN GUARD LOCATION, ISAAC 09-4813	IPG	12/4/2009
04	CAT. # 108092.00: "C" WAS 17.32, "L" WAS 15.26, "AD" WAS 9.60, ISAAC 09-1828	IPG	5/14/2009
03	ADDED DATA FOR VARIOUS CAT. NUMBERS, COMPLETED TABLE	IPG	9/15/2008

TOLERANCES UNLESS SPECIFIED
DEC INCHES
X ±.1
XX ±.03
XXX ±.005
XXXX ±.0005
ANG ±1/2°
CHK

LEESON ELECTRIC MOTORS GEARMOTORS AND DRIVES

TITLE OUTLINE
48 FRAME DC - S56C MOUNT
MAT'L
FINISH
RFP
PREV
NETWORK FILE NAME 031879

THIRD ANGLE PROJECTION

DRAWN RWS 1/8/08
CHK IPG 1/9/08
APPR
SCALE 1:2
REF 031189.00
FMF 108022.75
PAGE OF
SIZE B
DRAWING NO 031879
REV 06

You created this PDF from an application that is not licensed to print to novaPDF printer (http://www.novapdf.com)